SINGLE DOOR WITH CONTACT, CARD READER, MAGNETIC LOCK, RTE & DMA

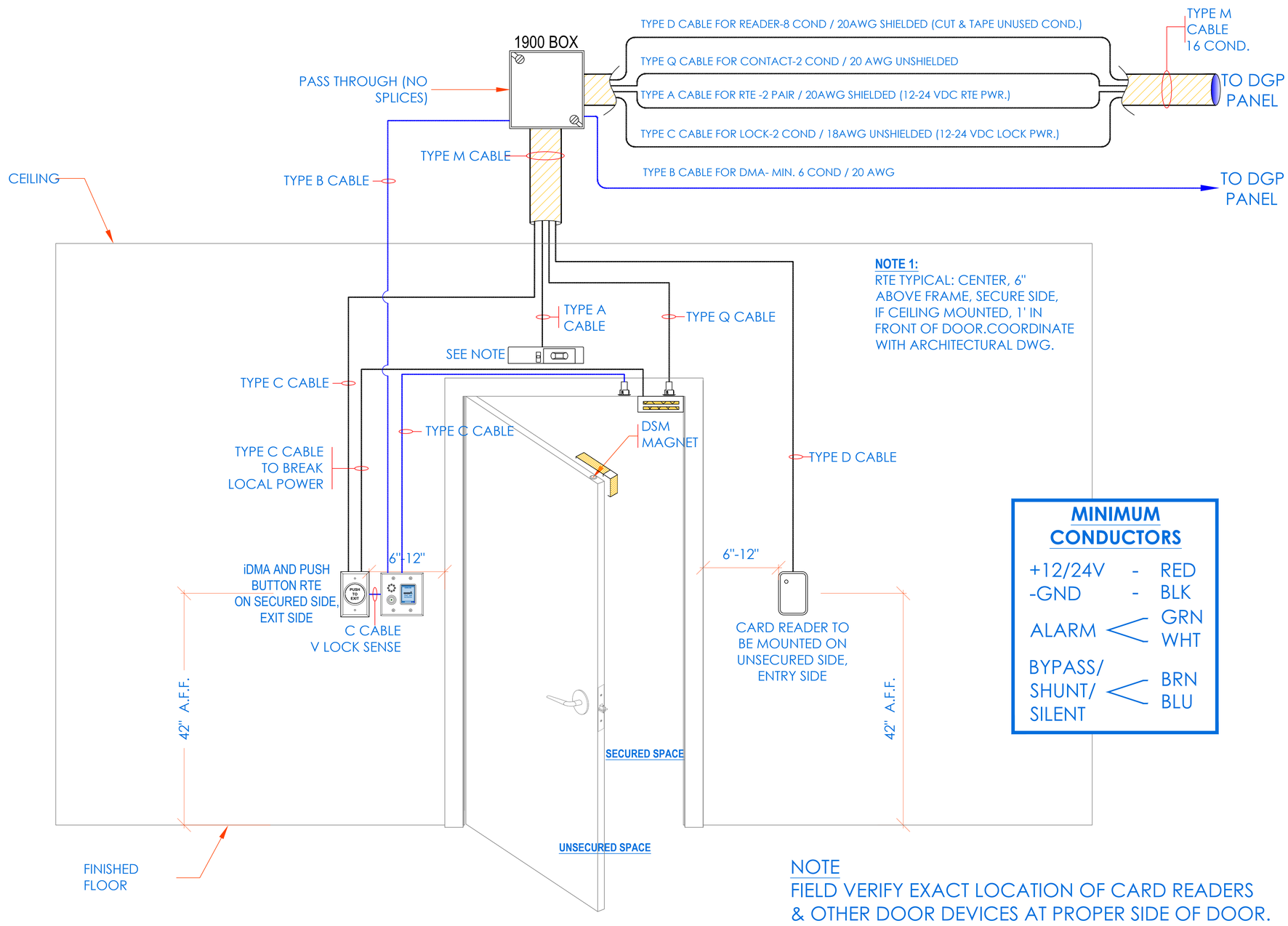

NOTE
FIELD VERIFY EXACT LOCATION OF CARD READERS & OTHER DOOR DEVICES AT PROPER SIDE OF DOOR. DETAIL REPRESENTS TYPICAL BACKBOX AND CONDUIT REQUIREMENTS. SEE THE FLOOR PLANS FOR EXACT DEVICE REQUIREMENTS AND LOCATIONS.
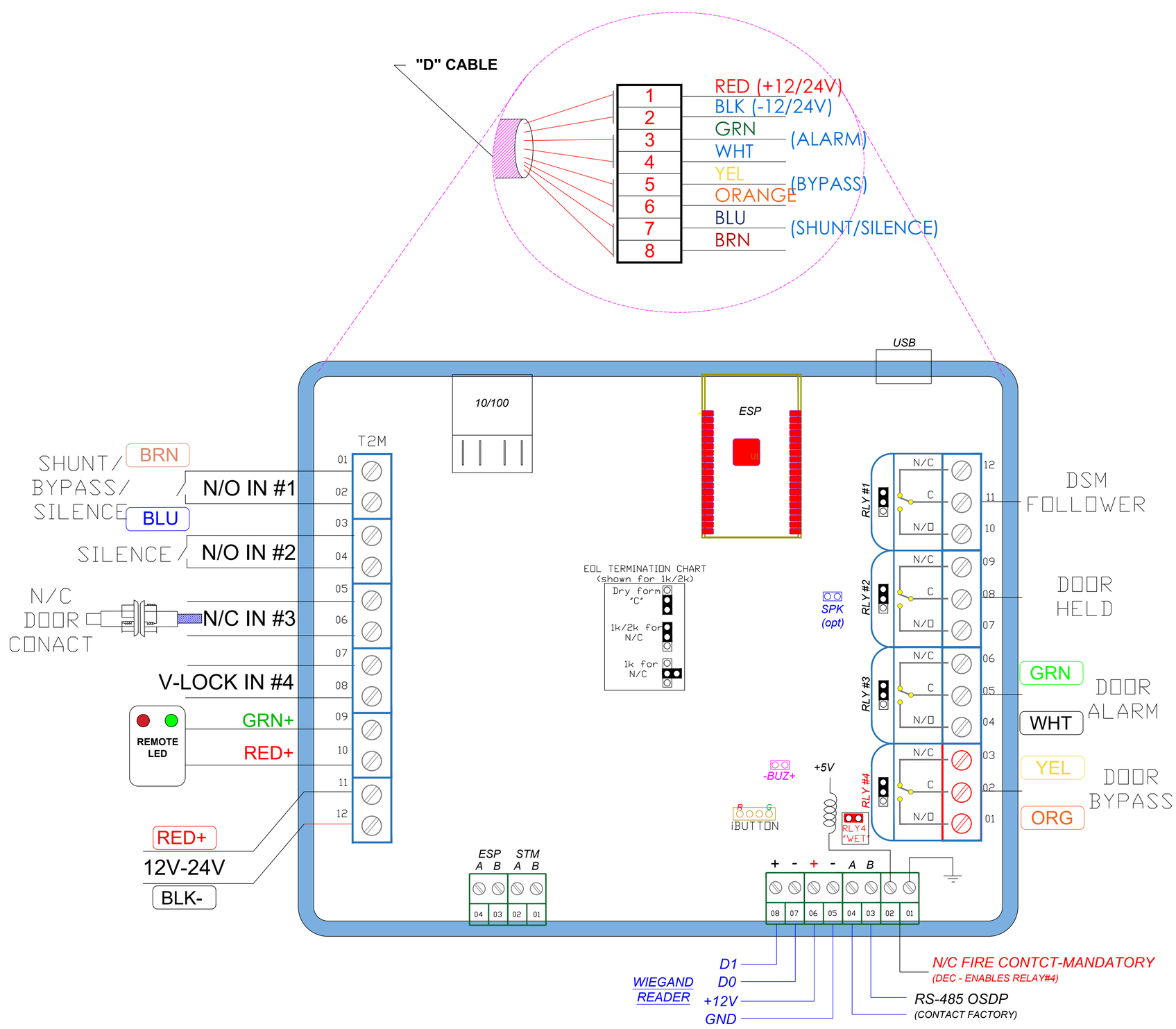
WIRING DETAIL